

3.3 kV CoolSiC™ MOSFET XHP™ 2

Karsten Schoo, Senior Director Product Marketing

PCIM 2023

Energy efficient and reliable rail transport is key to reducing the greenhouse gas emissions and achieving the EU climate targets



Traction application – Key requirements

- Energy efficiency
- High power density, lower system volume and weight (more transport capacity)
- Long lifetime (> 30 years) with demanding mission profiles
  - Frequent accelerating and breaking
- Standardized power semiconductor module (flexible & scalable design)

Copyright © Infineon Technologies AG 2023. All rights reserved.

Green Rail Transport
CoolSiC™ MOSFET is a key enabler for energy efficiency

Green Rail Transport

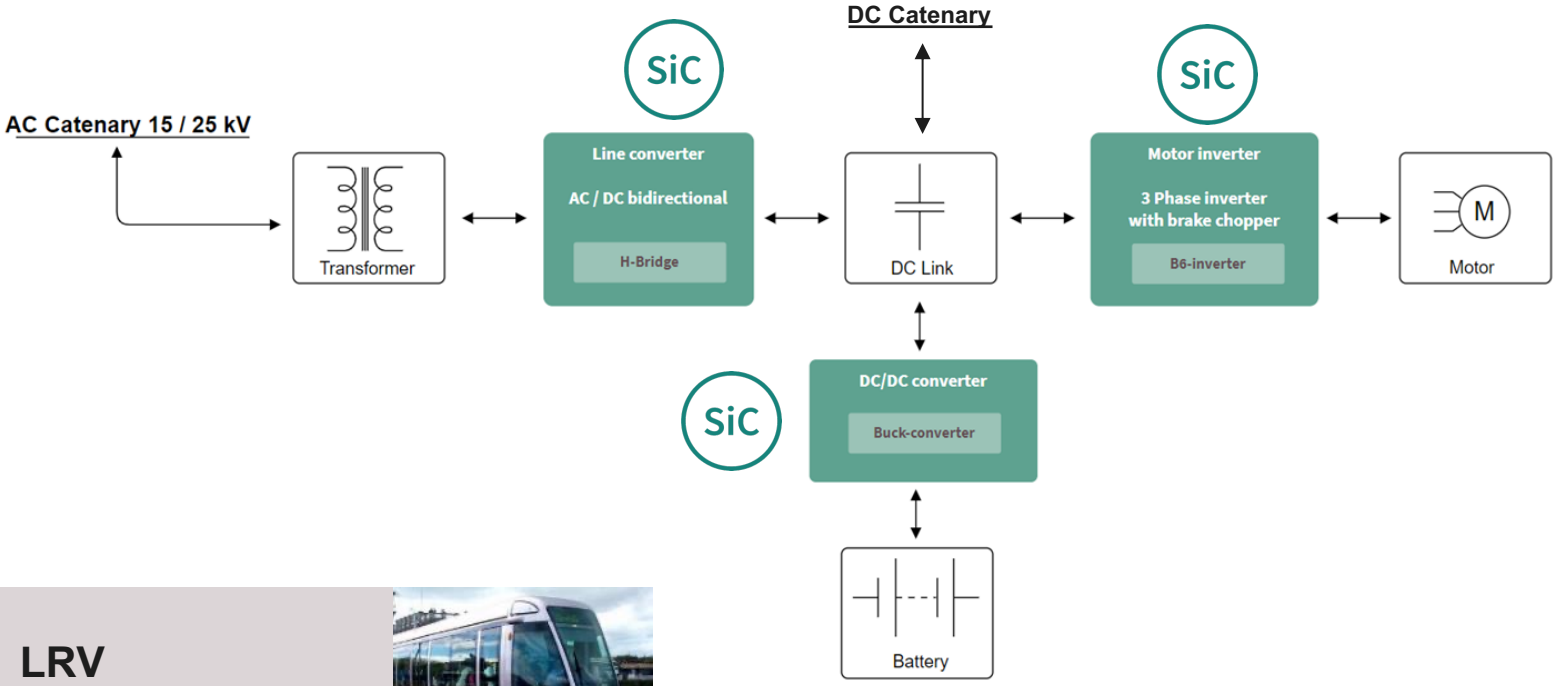

Targets

- Reduced energy consumption
- range extension (H2 & Battery)
- Noise reduction
- Weight & volume reduction

LRV
300 kW – 900 kW

HST
5 MW – 20 MW



Metro
700 kW – 4 MW



EMU
1 MW – 4 MW



Loco
4 MW – 6,4 MW



Copyright © Infineon Technologies AG 2023. All rights reserved.

CoolSiC™ MOSFET in a low-inductive XHP™ 2 package with .XT joining technology: low losses and high power cycling capability

CoolSiC™ MOSFET



XHP™ 2 package



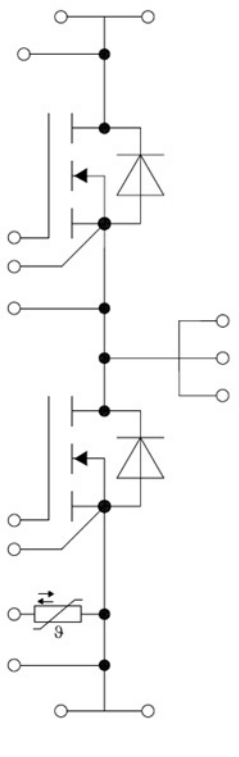

.XT joining technology

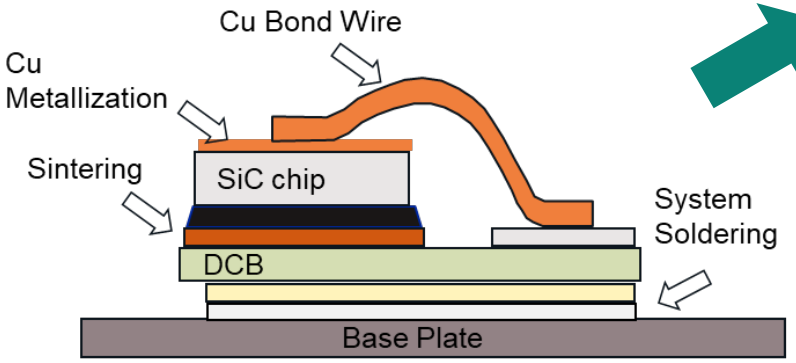

Reduction of losses

High cycling capability

Copyright © Infineon Technologies AG 2023. All rights reserved.

Key differentiating features of CoolSiC™ MOSFET with .XT

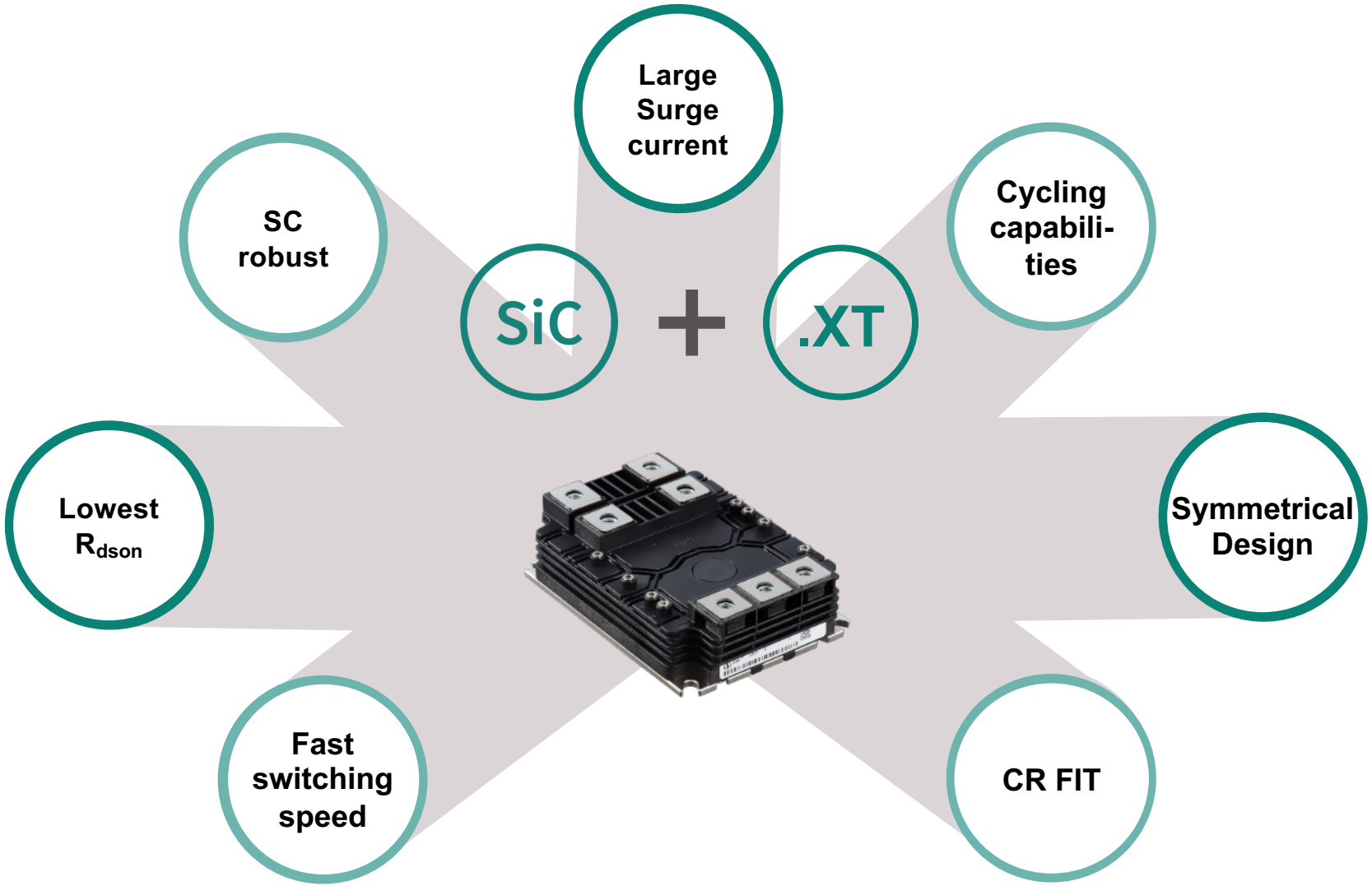

Copyright © Infineon Technologies AG 2023. All rights reserved.

Highlighted products in Infineon SiC portfolio: 2,0 mΩ and 2,6 mΩ 3.3 kV XHP™ 2 CoolSiC™ MOSFET .XT

Highlighted products: FF2000UXTR33T2M1 and FF2600XTR33T2M1

Specification

- 3.3 kV CoolSiC™ MOSFET with integrated body diode
- XHP™ 2 package
- V_{DSS} = 3.3 kV
- R_{DSon}= 2,0 mΩ and 2,6 mΩ
- I_{Dnom} = 1000 A and 750 A
- AlSiC baseplate
- CTI > 600
- V_{ISOL} = 6 kV
- L_s = 10 nH





Copyright © Infineon Technologies AG 2023. All rights reserved.

Fast switching and low losses are a hallmark of the 3.3 kV XHP™ 2 CoolSiC™ MOSFET .XT's dynamic performance

- **3.3 kV XHP™ 2 CoolSiC™ MOSFET** is designed to ensure fast switching, with low losses and low oscillation tendency
- Turn-on: **di/dt = 7 kA/µs**
- Turn-off: **du/dt = 17,5 kV/µs**



Turn-off waveforms

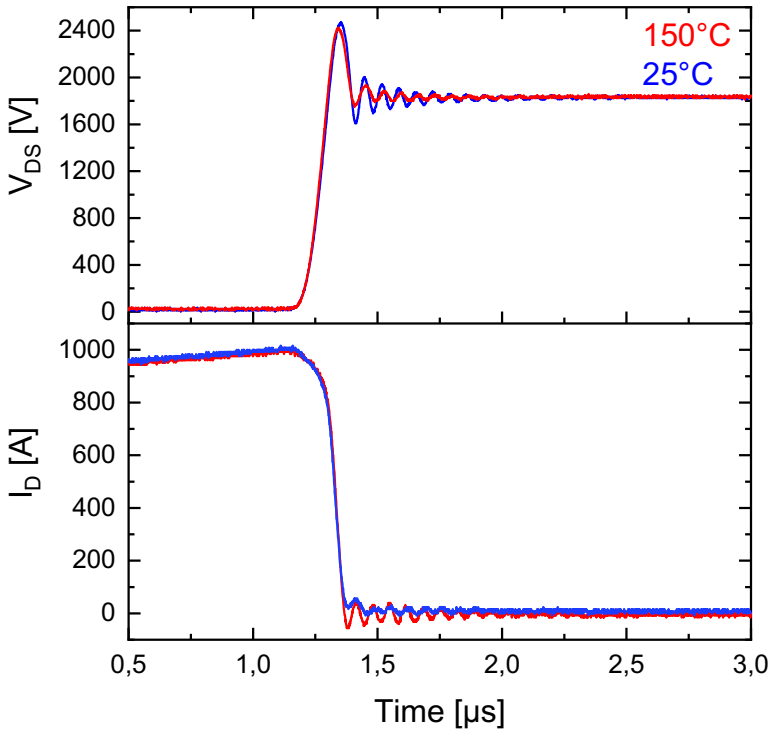

Turn-on waveforms

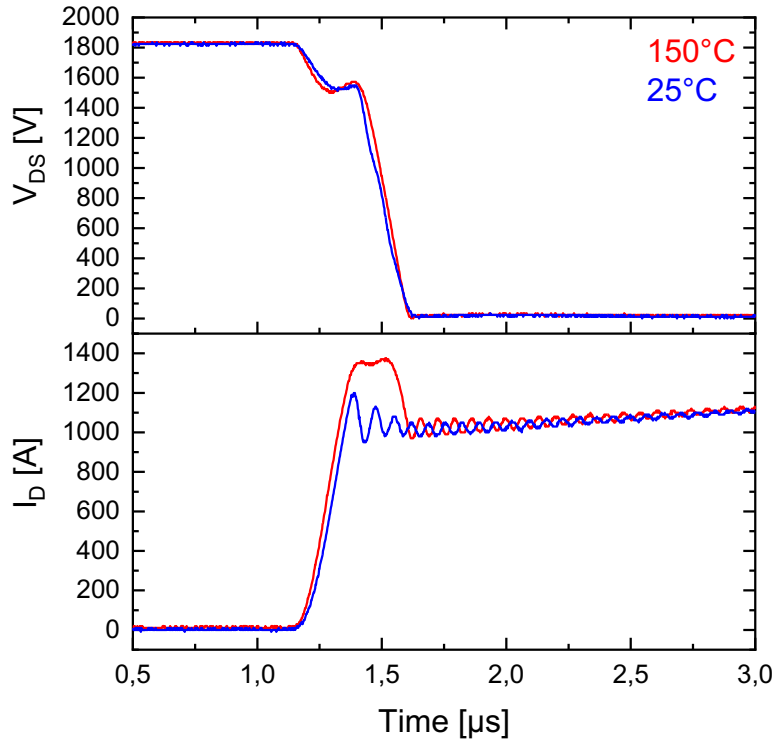

Note: Images show the waveforms of typical modules under nominal conditions.

Copyright © Infineon Technologies AG 2023. All rights reserved.

High switching frequencies of XHP™ 2 CoolSiC™ MOSFET .XT boosts the efficiency of the whole traction system

XHP™ 2 CoolSiC™ MOSFET .XT improves the efficiency of the input, motor and hybrid circuit of the traction system:

Losses reduction in the transformer and motor results in **10% overall losses reduction**

Traction System w/ AC-catenary

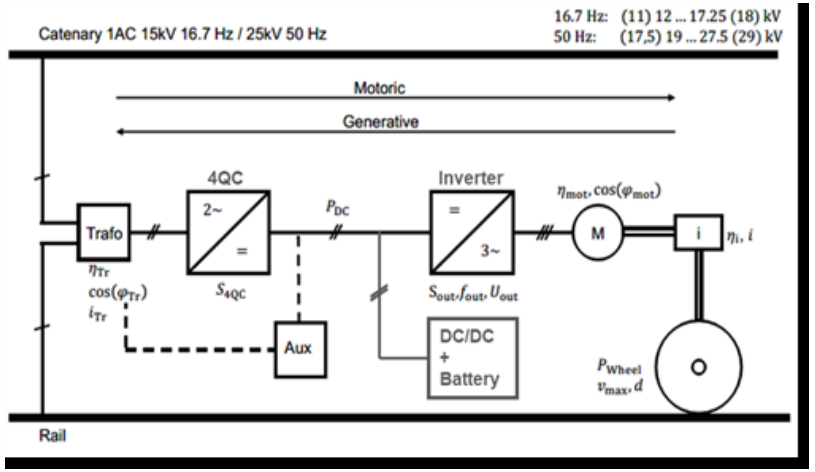

Energy savings for SiC – based converter

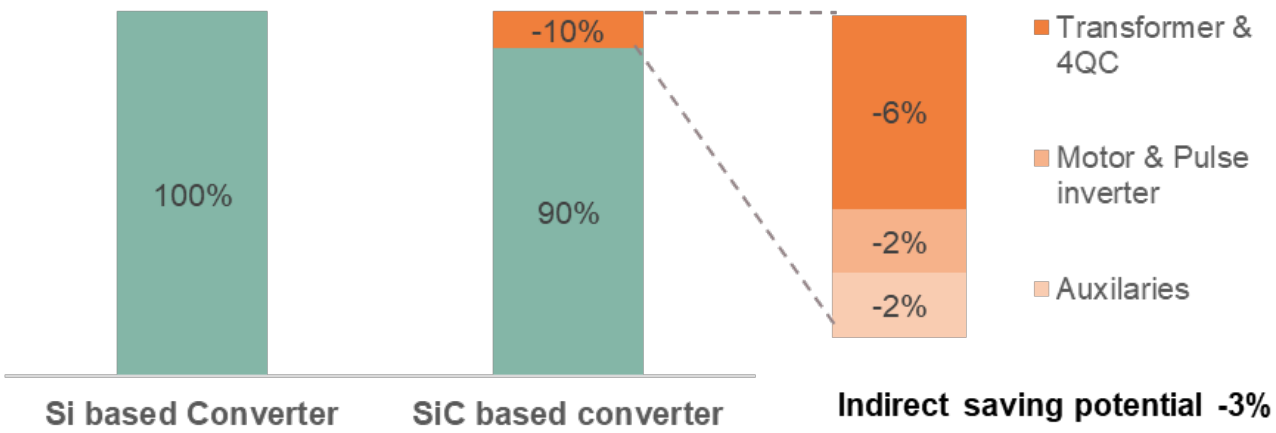

Source: link

Copyright © Infineon Technologies AG 2023. All rights reserved.

XHP™ 2 CoolSiC™ MOSFET .XT in a Munich tram: Field test demonstrates ~10% energy savings on system level!

CoolSiC™ MOSFET XHP™ 2 | **Field test in a tram** | **Energy savings**

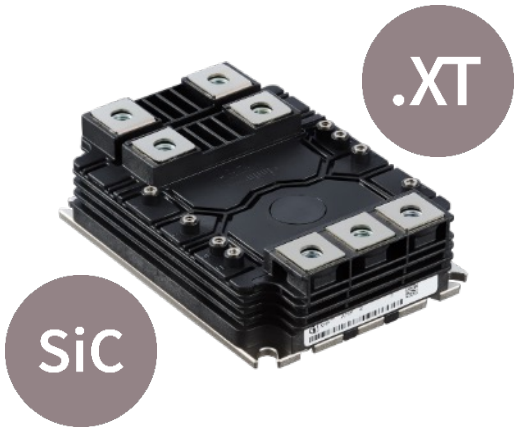



Assumptions: 60.000 km per tram, 5 kWh/km; 3.75 MWh annually for average household

XHP™ 2 CoolSiC™ MOSFET .XT enables **~10% energy savings**, which amounts to **~ 30 MWh per year per tram**. This is an equivalent of the yearly energy consumption of 8 average households!

Source: link

Copyright © Infineon Technologies AG 2023. All rights reserved.

XHP™ 2 CoolSiC™ MOSFET .XT: compact, lighter and more efficient traction systems, extending the range of hybrid trains

Reducing the system size…



High switching frequencies, low losses and high power density of **XHP™ 2 CoolSiC™ MOSFET .XT** enable **10 to 25% system volume reduction.**

Source: link

…extends the catenary-free ride

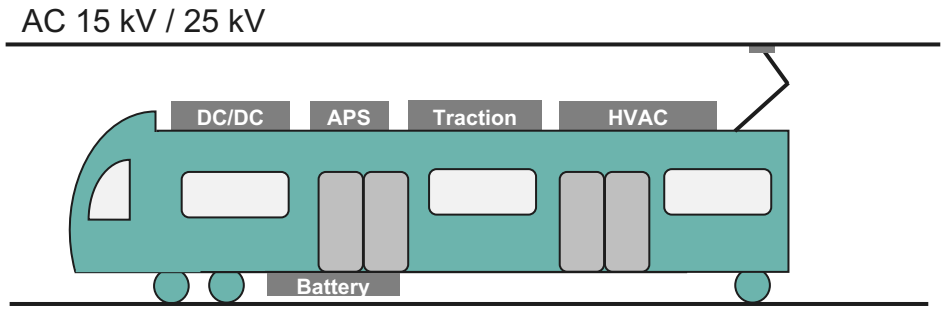

Catenary-free operation of hybrid propulsion trains is powered by batteries or hydrogen fuel cells.

XHP™ 2 CoolSiC™ MOSFET .XT helps to extend the catenary-free mileage by:

- enabling compact, weight optimized solutions that maximize installable energy
- enabling the more efficient use of the installed energy, due to reduced system losses

Copyright © Infineon Technologies AG 2023. All rights reserved.

High switching frequencies and low losses of XHP™ 2 CoolSiC™ MOSFET .XT enable quiet motor and cooling systems



Enjoy the silence

- The switching frequency of the converter has a large impact on the acoustic noise of electromagnetic origin
  - **The higher the switching frequency**, the lower is the sound power level radiated from the motor, and **the quieter the train ride**
- **Low losses** mean less dissipated power and therefore **less cooling effort** → this enables smaller, **quieter cooling systems**

Copyright © Infineon Technologies AG 2023. All rights reserved.

XHP™ 2 CoolSiC™ MOSFET .XT key take-away



XHP™ 2 CoolSiC™ MOSFET .XT enables

Fast switching:

- turn-on: di/dt = 7 kA/µs
- turn-off: du/dt = 17,5 kV/µs

Reduction of losses:

- ~10% decrease of losses on system level

Compact, lighter and quieter systems:

- ~10 to 25% system volume reduction

Robust modules with high cycling capabilities:

- .XT joining technology

Copyright © Infineon Technologies AG 2023. All rights reserved.


Infineon